The Principles of Universal Design

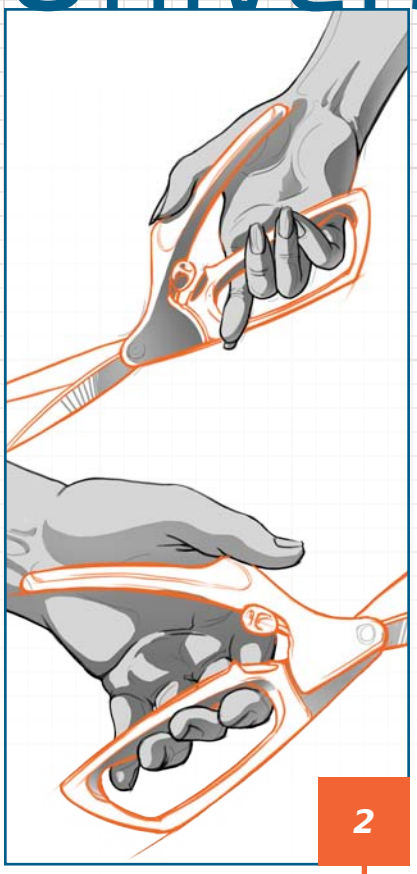

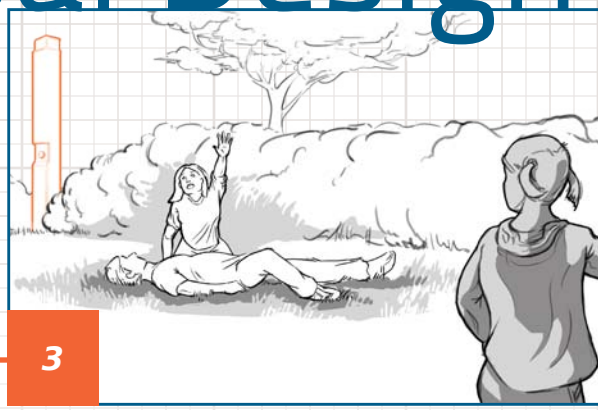

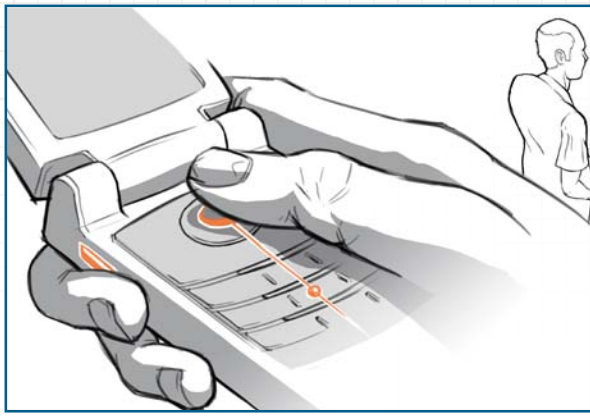

PRINCIPLE

Equitable Use

The design is useful and marketable to people with diverse abilities.

Flexibility in Use

The design accommodates a wide range of individual preferences and abilities.

Simple and Intuitive Use

Use of the design is easy to understand, regardless of the user's experience, knowledge, language skills, or education level.

GUIDELINES

1a. Provide the same means of use for all users: identical whenever possible; equivalent when not.

1b. Avoid segregating or stigmatizing any users.

1c. Provisions for privacy, security, and safety should be equally available to all users.

1d. Make the design appealing to all users.

2a. Provide choice in methods of use.

2b. Accommodate right- or left-handed access and use.

2c. Facilitate the user's accuracy and precision.

2d. Provide adaptability to the user's pace.

3a. Eliminate unnecessary complexity.

3b. Be consistent with user expectations and intuition.

3c. Accommodate a wide range of literacy and language skills.

3d. Arrange information consistent with its importance.

3e. Provide effective prompting and feedback during and after task completion.

EXAMPLES

- Power doors make visiting public spaces easier for all users.
- E-mail makes communication easier for everyone, including people who have trouble communicating via phone.

Large grip scissors accommodates use with either hand and allows alternation between the two in repetitive tasks.

- Public emergency stations utilize recognized emergency colors and a simple design to quickly convey function to passers-by.
- Intuitive ATM interfaces allow use without instruction or training.

4

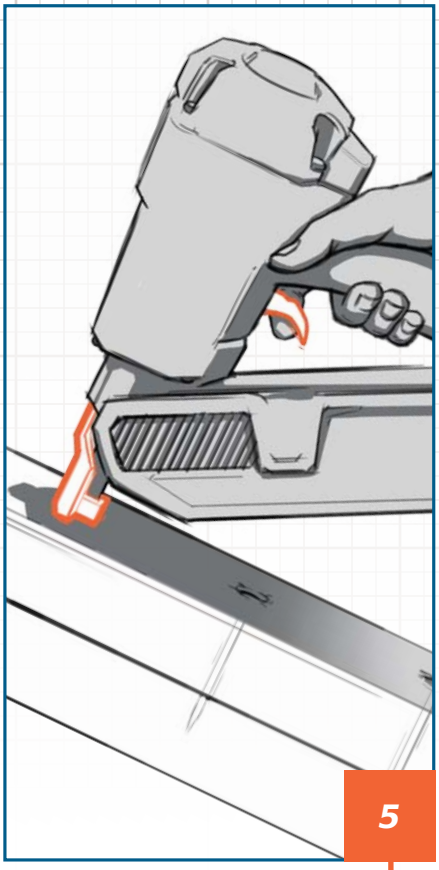

5

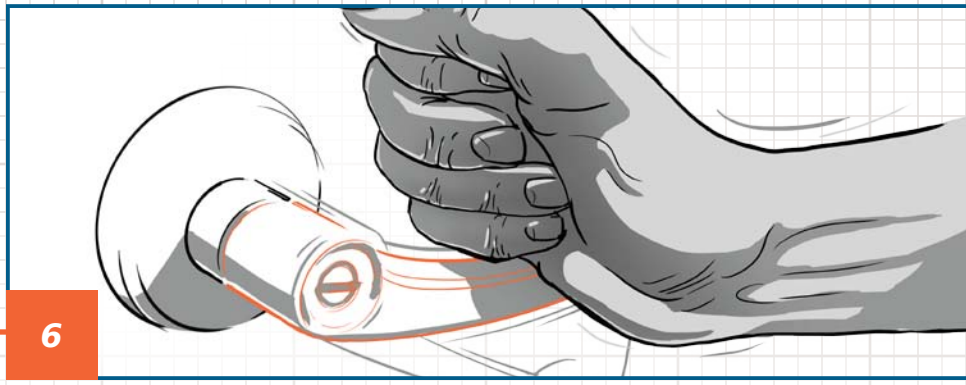

6

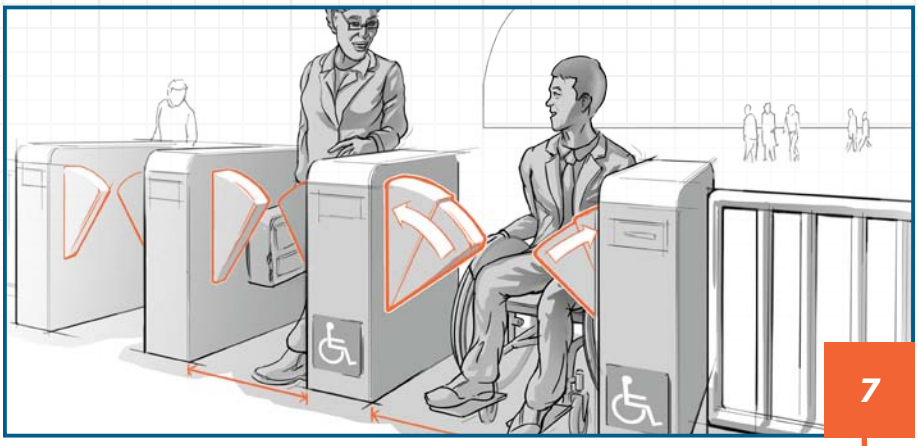

7

Perceptible Information

The design communicates necessary information effectively to the user, regardless of ambient conditions or the user's sensory abilities.

4a. Use different modes (pictorial, verbal, tactile) for redundant presentation of essential information.

4b. Provide adequate contrast between essential information and its surroundings.

4c. Maximize "legibility" of essential information.

4d. Differentiate elements in ways that can be described (i.e., make it easy to give instructions or directions).

4e. Provide compatibility with a variety of techniques or devices used by people with sensory limitations.

Small bumps on a cell phone keypad tell the user where important keys are without requiring the user to look at the keys.

Tolerance for Error

The design minimizes hazards and the adverse consequences of accidental or unintended actions.

5a. Arrange elements to minimize hazards and errors: most used elements, most accessible; hazardous elements eliminated, isolated, or shielded.

5b. Provide warnings of hazards and errors.

5c. Provide fail safe features.

5d. Discourage unconscious action in tasks that require vigilance.

The "sequential trip" mechanism on a nail gun prevents accidental firing when the tool is not pressed against an object.

Low Physical Effort

The design can be used efficiently and comfortably and with a minimum of fatigue.

6a. Allow user to maintain a neutral body position.

6b. Use reasonable operating forces.

6c. Minimize repetitive actions.

6d. Minimize sustained physical effort.

Door lever does not require grip strength to operate, and can even be operated by a closed fist or elbow.

Size and Space for Approach and Use

Appropriate size and space is provided for approach, reach, manipulation, and use regardless of user's body size, posture, or mobility.

7a. Provide a clear line of sight to important elements for any seated or standing user.

7b. Make reach to all components comfortable for any seated or standing user.

7c. Accommodate variations in hand and grip size.

7d. Provide adequate space for the use of assistive devices or personal assistance.

Wide gates at subway stations accommodate wheelchair users as well as commuters with packages or luggage.